Rail unit

Straight rail

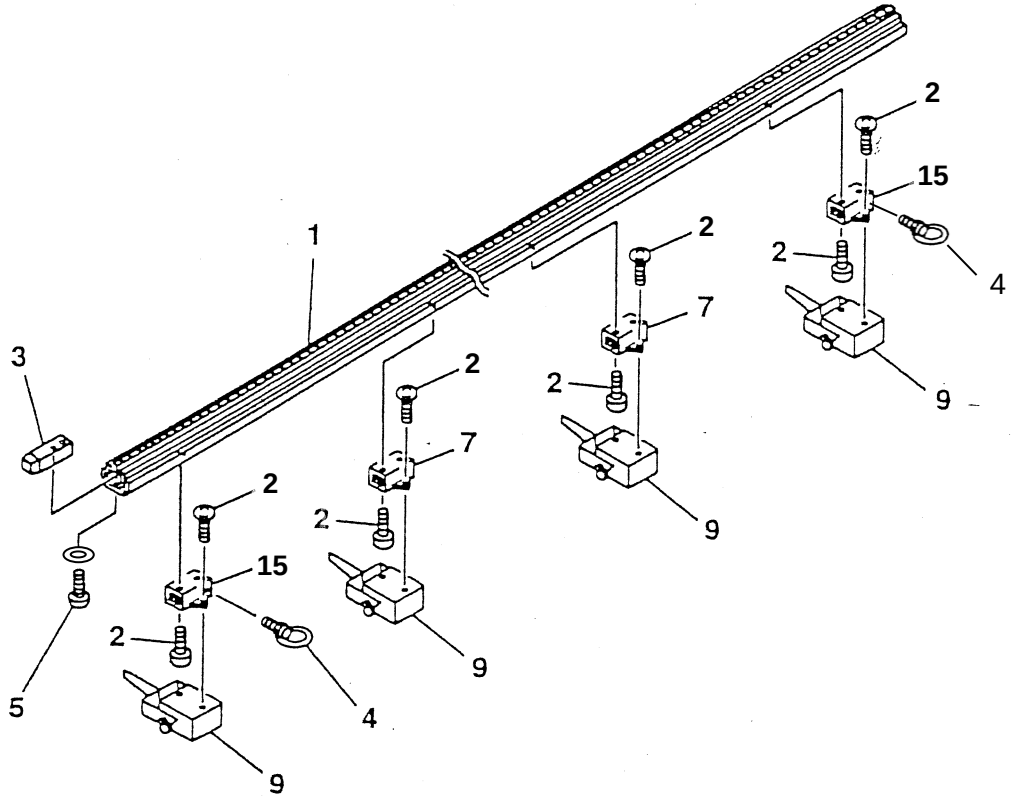

2,3 Dimension rail

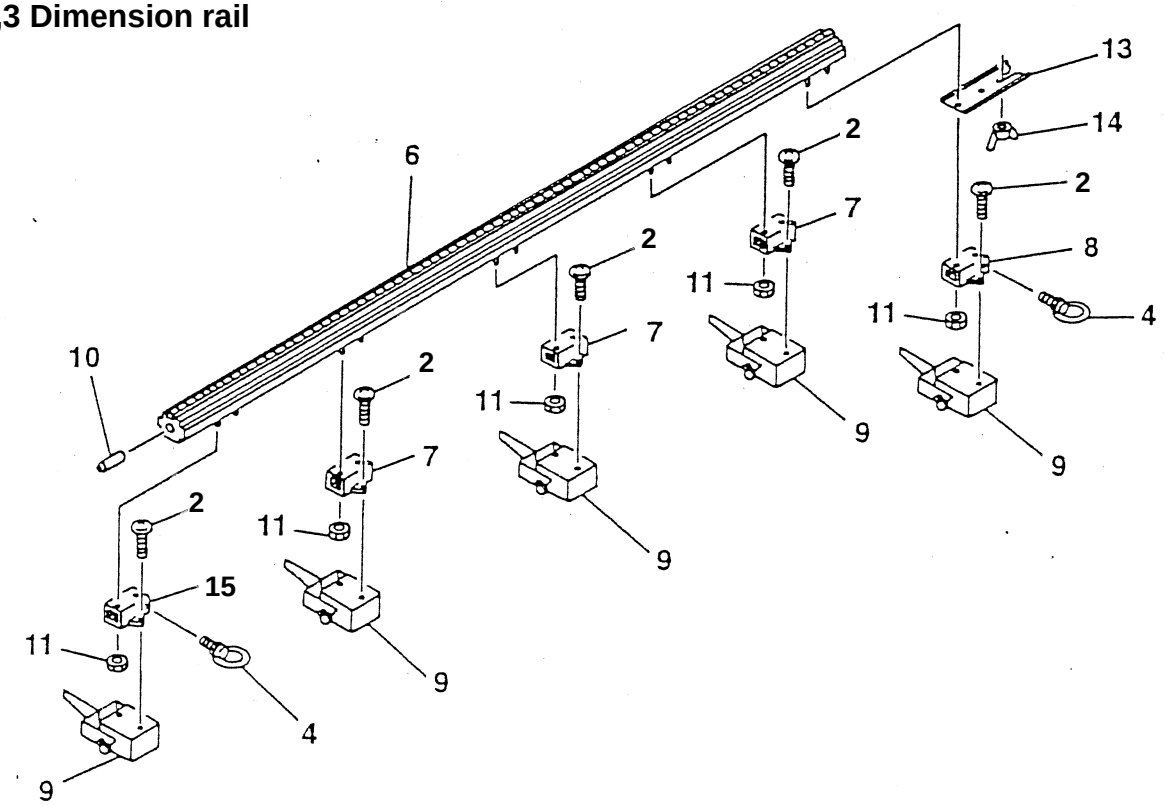

Rail unit

ITEM No.	PART NAME	QTY	STOCK No.	REMARKS
1	Straight rail	1	60038801	With Rack
2	Screw	16	6C530515	M5x15 with WS 1D only
2	Screw	10	6C530515	M5x15 with WS 2D 3D only
3	Connector	1	60031694	1D only
4	Hook bolt	2	60031654	
5	Screw	2	6C520620	SP-6x20 1D only
	Washer	2	6D590060	M6 1D only
6	2-dimension rail	1	60033137	Rail only
	3-dimension rail	1	60033142	Rail only
7	Magnet holder(A-1)	2	60031657	1D only
7	Magnet holder(A-1)	3	60031657	2D,3D only
8	Magnet holder(B)	1	60031658	2D,3D only
9	Magnet	4	60031682	120kg 1D
9	Magnet	5	60031682	120kg 2D ,3D
10	Coupling pin	1	61006439	2D,3D only with Spring pin
11	Nut	10	6D010050	2D,3D only NH-5
	Washer	10	6D510050	2D,3D only WS-5
13	Coupling board	1	60031659	2D,3D only
14	Wing nut	1	6D080060	NB-6 2D,3D only
	Washer	1	6D500060	WF-6 2D,3D only
15	Magnet holder(A-2)	2	60031683	1D only
15	Magnet holder(A-2)	1	60031683	2D,3D only

ITEM No.	PART NAME	QTY	STOCK No.	REMARKS